Unical

ALKON 140 EXT

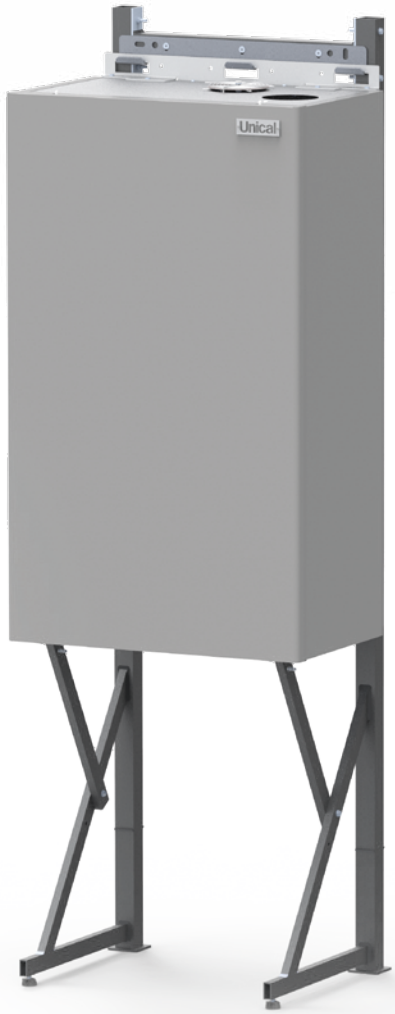

MODULATING CONDENSING BOILER with double premix low NO_x burner
and double heat exchanger EXPANDABLE IN BATTERY for indoor and outdoor installations (IPX5D)

OUTPUT RANGE	from 115 to 560 kW (in battery)
EMISSIONS	Class 6 NO_x
SUPPLY	Natural Gas or LPG
MODELS	140 EXT
SEASONAL EFFICIENCY	**A**

Wall hung with dedicated supporting kit
available in battery up to 4 units for a total of 560 kW
can be combined both with MIXING HEADER and with PLATE HEAT EXCHANGERS

MAIN COMPONENTS

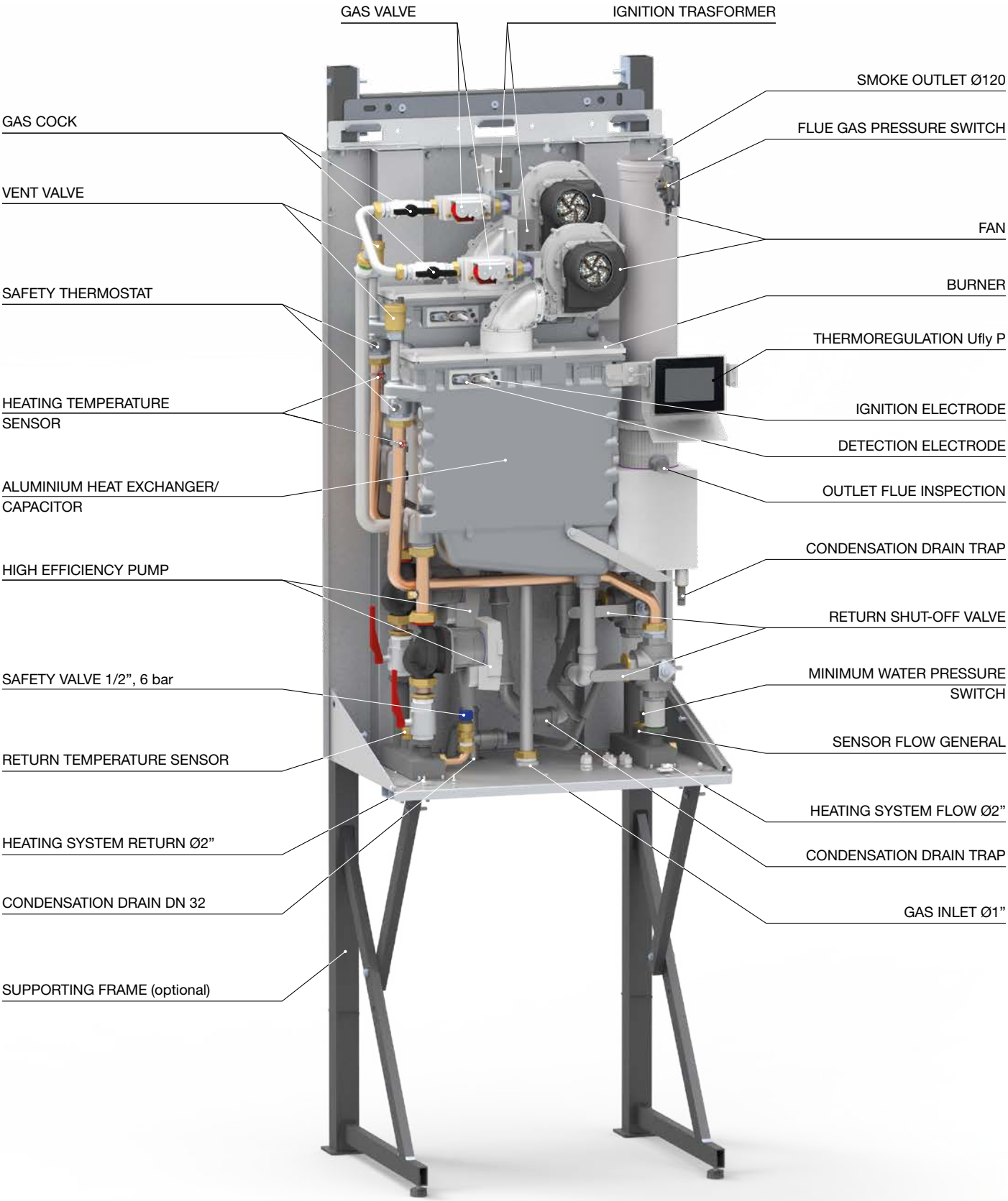

PRODUCT PLUS VALUES

- **CALIBRATION POSSIBILITY according to the thermal requirement of the system**
  (possible customization of the requested power)
- **2 complete interceptables THERMAL ELEMENTS,**
  operating also separately in case of necessity, controlled by the BMM (Burner Module Manager) electronic cards
- **2 LOW WATER CONTENT HEAT EXCHANGERS in Al/Si/Mg**
  alloy, the best for:
  - 100% wet surfaces of the boiler body
  - for long time guaranteed efficiency, thanks to the absence of scaling
  - reliability, thanks to the optimized circulation that avoids thermal overloads (NTC control's sensors)
  - long lasting, fruit of the multi-year metallurgical Unical experience
- **2 LOW NO_x PREMIX MODULATING BURNERS**
  in class 6, composed by:
  - 2 fans (40 Pa of manometric head) with electronically controlled speed
  - 2 safety gas valves with constant air-gas ratio
  - radiating flame surface in "metallic sponge" (guaranteed operation up to 13 mbar of natural gas pressure)
- **2 MODULATING PUMPS** (one for each thermal element) with antifreeze protection , antijamming and overrun circulation
- **MINIMUM WATER PRESSURE SWITCH**
- Ready for the **ELECTRICAL CONNECTION** of the additional safety devices
- **OPTIONAL HYDRAULIC GROUPS** including:
  - Pipe for installation of safety devices and accessories
  - Differential pressure switch for the control of water circulation
  - Hydraulic connection system
  - Mixing header
- **COMPLETE OUTER CASING FOR OUTDOOR INSTALLATION**
  in electro-galvanized steel sheet with epoxy-polyester painting
- **CONVERSION KIT** from Nat. Gas to LPG, optional
- **EXPANDIBLE IN CASCADE** up to 1120 kW (8 boilers, 2 group of 4 booiler in cascade)
- **OPTIONAL ACCESSORIES** for cascade installation
- **Kit Gateway P for Ufly P remote connection (optional)**
- **Wall box kit for Ufly P.**

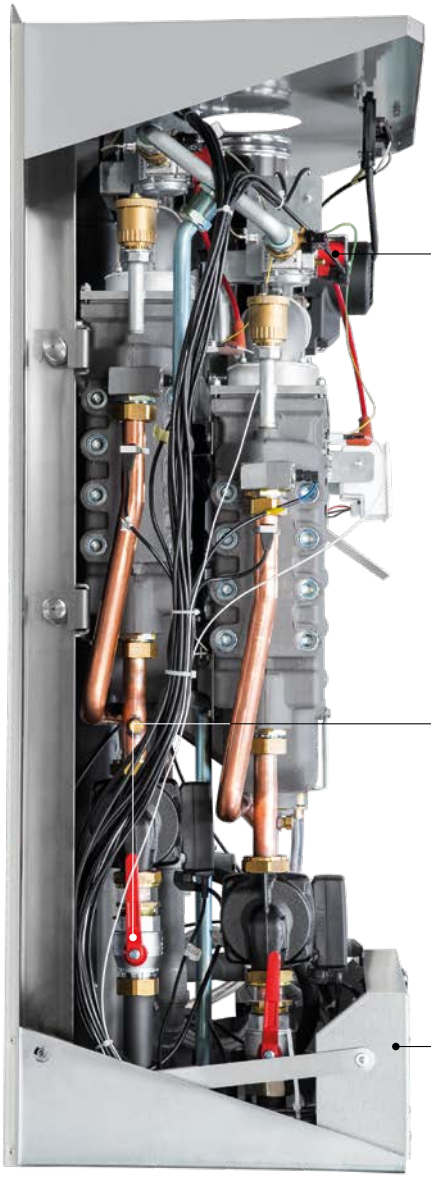

View that underlines the particular skew between the 2 thermal elements in order to facilitate the maintenance interventions

Pumps and gate valves

Group of: fan, modulating gas valve, premix burner

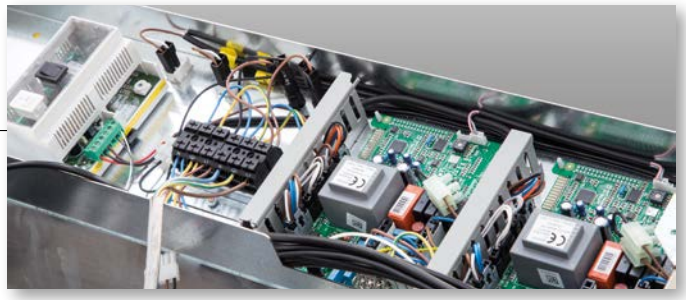

Assembly of the electronic PCBs for the management of the thermal elements and BCM 2.0

DIMENSIONS OF A SINGLE BOILER ALKON 140 EXT

FRONT VIEW

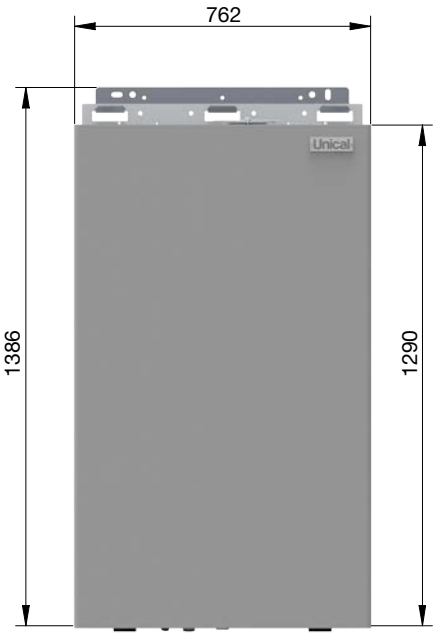

SIDE VIEW

VIEW FROM BELOW

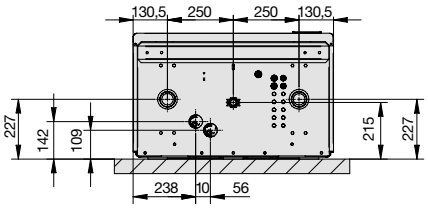

VIEW FROM ABOVE

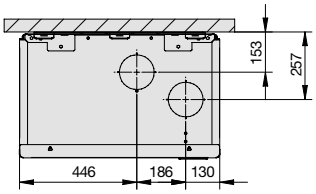

ALKON	Net Weight kg	Gross Weight (with packaging) kg
140 EXT	160	180

DIMENSIONS WITH SUPPORTING FRAME (optional)

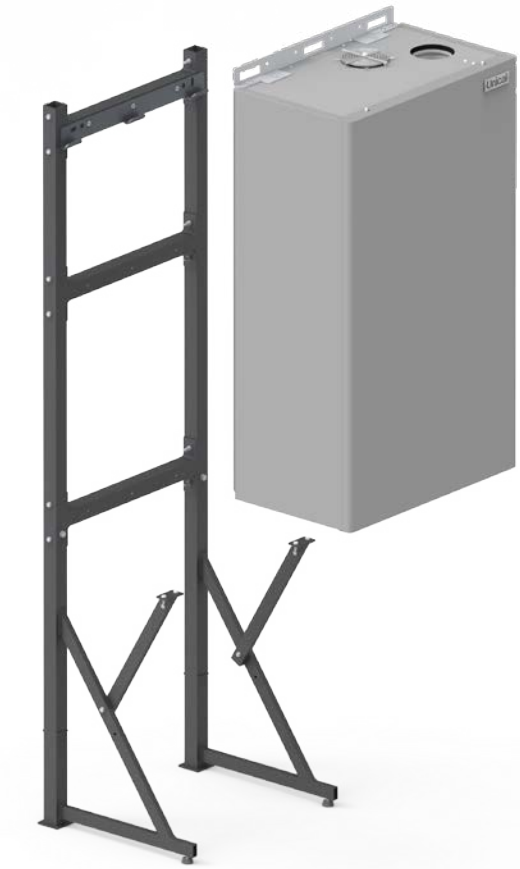

FRONT VIEW

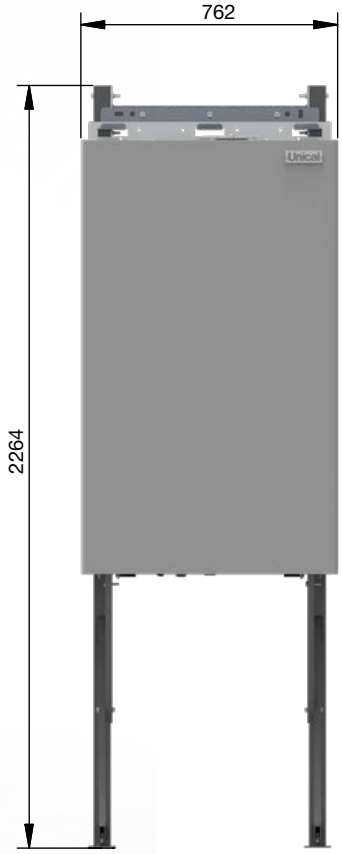

SIDE VIEW

DIMENSIONS OF TWO ALKON 140 EXT IN BATTERY

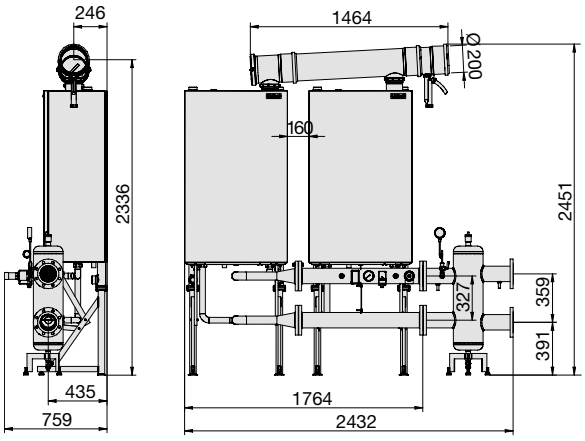

Operational data		ALKON 140 EXT
Minimum Input on N.C.V. Qmin	kW	11
Nominal Input on N.C.V. Qn	kW	270
Nominal Output (60/80°C) Pn	kW	263.20
Nominal Output (30/50°C) Pcond	kW	271.36
Setting temperature of the gas cut-off valve	°C	98^{+0}_{-5}

Warning: The flue ducts in plastic material (PPS) are suitable only for Indoor installations.

DIMENSIONS OF THREE ALKON 140 EXT IN BATTERY

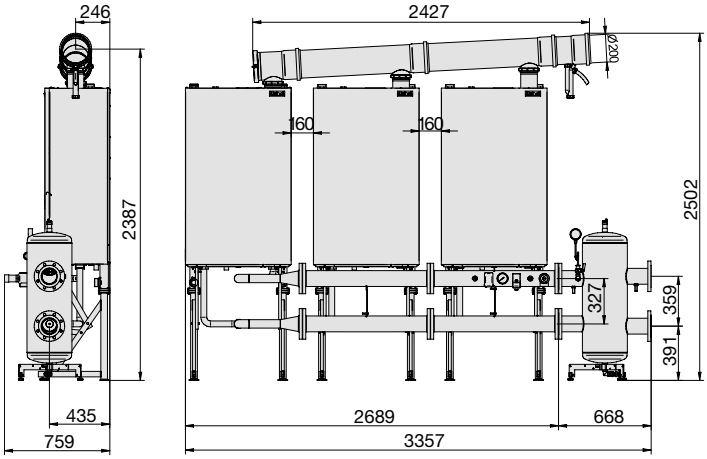

Operational data		ALKON 140 EXT
Minimum Input on N.C.V. Qmin	kW	11
Nominal Input on N.C.V. Qn	kW	405
Nominal Output (60/80°C) Pn	kW	394.8
Nominal Output (30/50°C) Pcond	kW	407.04
Setting temperature of the gas cut-off valve	°C	98^{+0}_{-5}

Warning: The flue ducts in plastic material (PPS) are suitable only for Indoor installations.

DIMENSIONS OF FOUR ALKON 140 EXT IN BATTERY

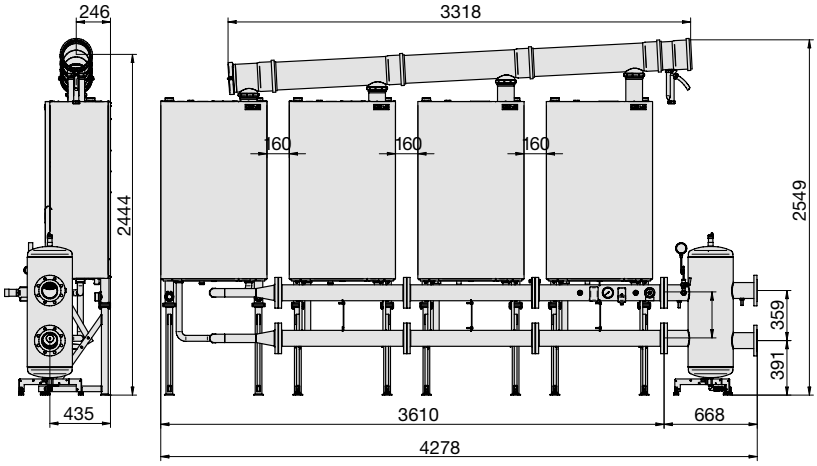

Operational data		ALKON 140 EXT
Minimum Input on N.C.V. Qmin	kW	11
Nominal Input on N.C.V. Qn	kW	540
Nominal Output (60/80°C) Pn	kW	526.40
Nominal Output (30/50°C) Pcond	kW	542.72
Setting temperature of the gas cut-off valve	°C	98^{+0}_{-5}

Warning: The flue ducts in plastic material (PPS) are suitable only for Indoor installations.

MATCHING PLATE EXCHANGERS

DIMENSIONS SERIES E 50W

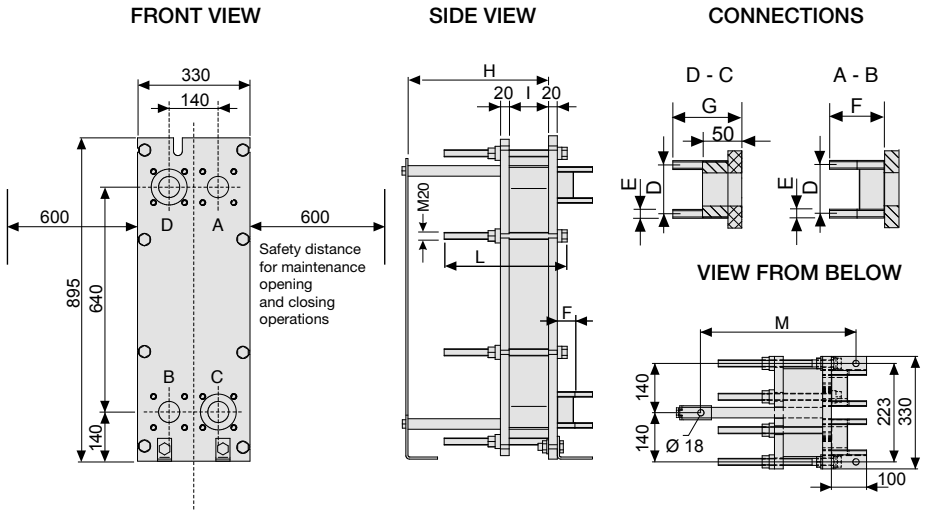

Plates	H	I	L	M
11	400	39	350	441
21	400	74	350	441
27	400	95	350	441
45	400	158	350	441

Connection	D	E	F	G
DN50 - 2”	125	M16	54	99

DIMENSIONS SERIES E 100W

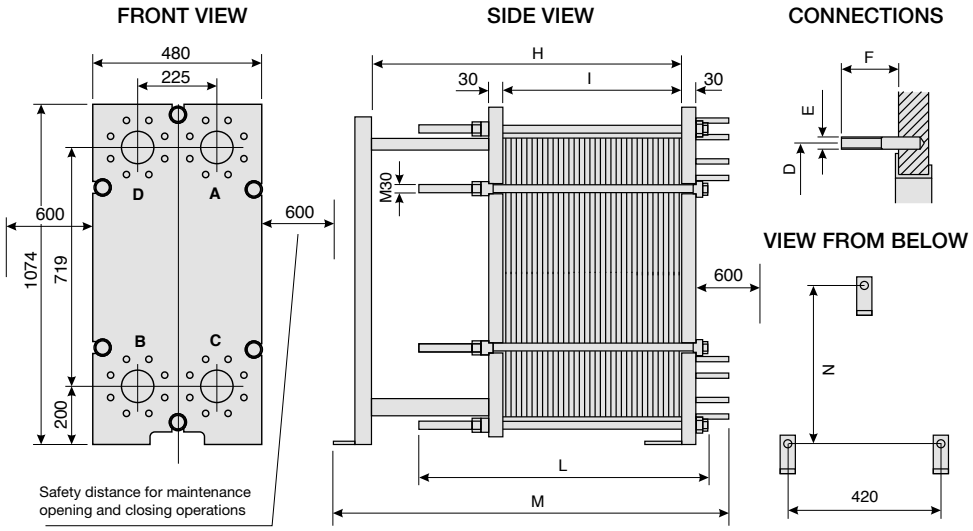

Plates	H	I	L	M	N
55	900	245	750	1110	905
63	900	281	750	1110	905
77	900	343	750	1110	905
87	900	388	750	1110	905

Connection	D	E	F
DN100 - 4”	180	M16	60

Number of boilers	Model	Number of plates	Pn kW	Δp (m H_2O) (*) primary / secondary	T. op. °C	Pmax bar	Volume H_2O primary / secondary	Connections primary / secondary	Weight kg
1	**E50W-21Y**	21	135	1,4 / 3,2	-10 / +110	10	4 / 4	DN50 / DN50	144
2	**E50W-45X**	45	270	2,0 / 4,4	-10 / +110	10	9 / 9	DN50 / DN50	165
3	**E100W-55H**	55	405	0,6 / 1,4	-10 / +110	10	27 / 27	DN100 / DN100	365
4	**E100W-55H**	55	540	1,1 / 2,5	-10 / +110	10	27 / 27	DN100 / DN100	367

(*) Δp alla Pn Circuito primario 80°C - 65°C Circuito secondario 60°C - 70°C

DIFFERENTIAL PRESSURE SWITCH KIT

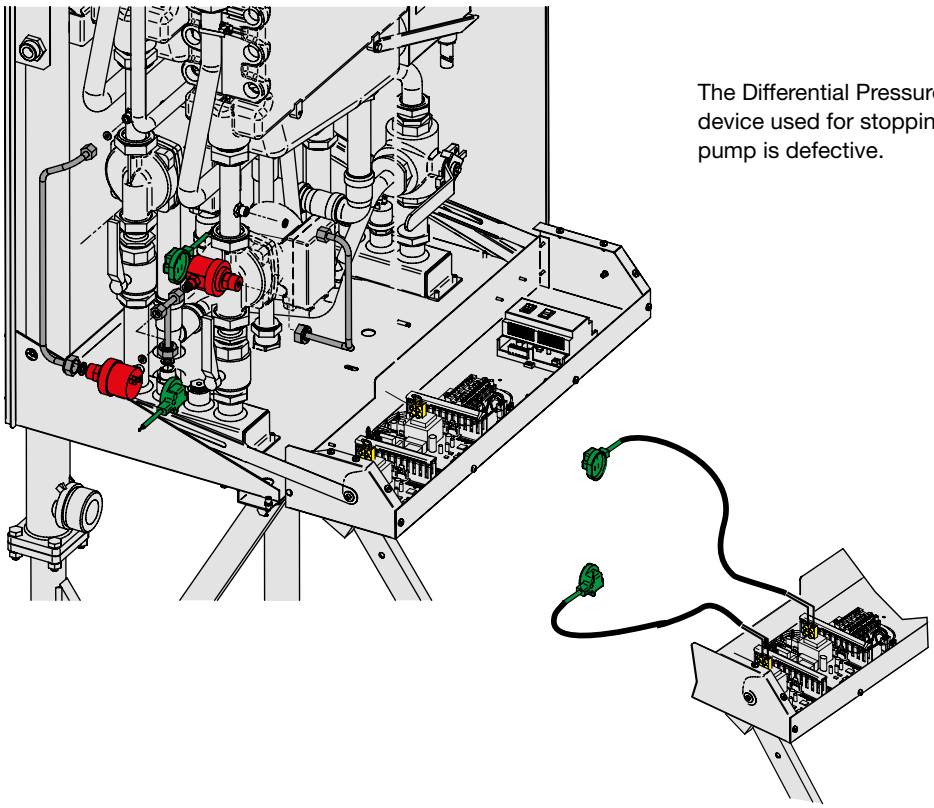

The Differential Pressure Switch kit is a safety device used for stopping the unit in case the pump is defective.

MOUNTING SCHEME OF HYDRAULIC MANIFOLDS

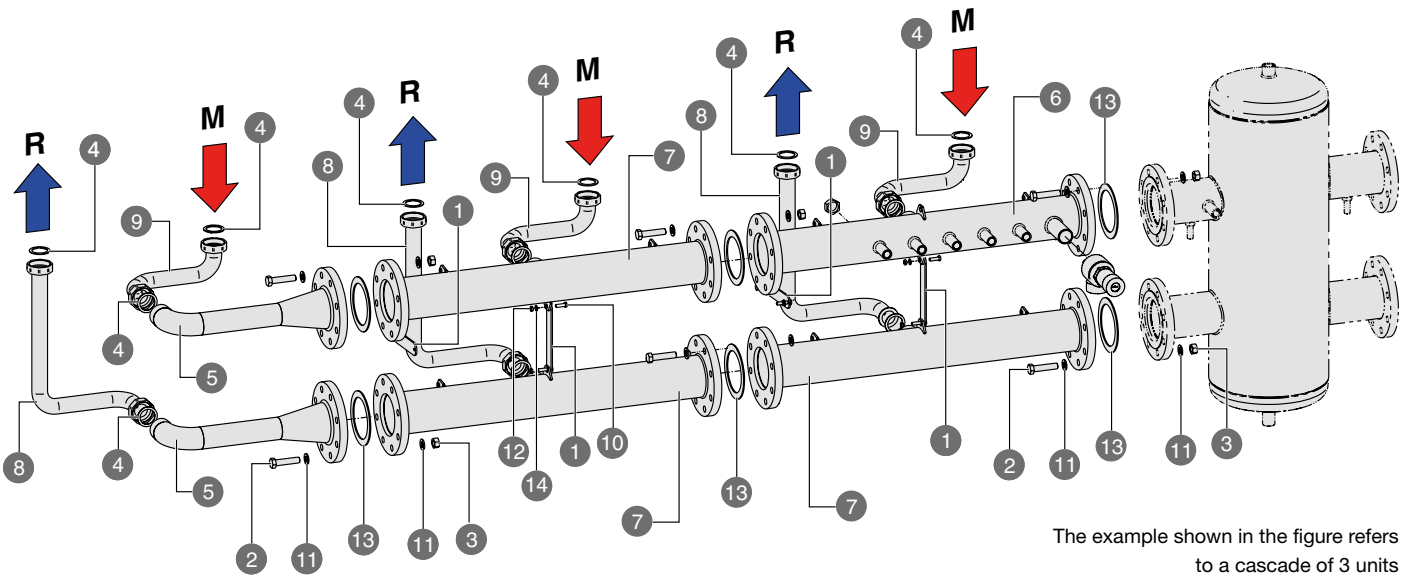

The example shown in the figure refers to a cascade of 3 units

Pos.	Description	No. of units		
		2x	3x	4x
1	Mounting bracket of the battery anifold	2	4	6
2	Screw M16	32	48	64
3	Nut M16	32	48	64
4	Gasket 2”	8	12	16
5	Return manifold of a single unit	2	2	2
6	Additional safety kit	1	1	1
7	Battery manifold	1	3	5

Pos.	Description	No. of units		
		2x	3x	4x
8	Return pipe between boiler & manifold	2	3	4
9	Flow pipe between boiler & manifold	2	3	4
10	Screw M10 x 40	4	6	8
11	Washer Ø 17 / 30	64	96	128
12	Nut M8	8	12	16
13	Gasket DN 100	4	6	8
14	Washer	8	12	16

TECHNICAL DATA

ELECTRICAL, HYDRAULIC, INSTALLATION DIAGRAMS AND CONTROLLERS can be unloaded from the web site www.unical.eu at the page of the product

		ALKON 140 EXT
Appliance category		II_{2H3P}
Modulation Ratio		1:12.3
Nominal Heat Input on P.C.I. Qn	kW	135
Minimum Heat Input on P.C.I. Qmin	kW	11
Nominal Output (Tr 60 / Tm 80 °C) Pn	kW	131.60
Minimum Output (Tr 60 / Tm 80 °C) Pn min	kW	10.5
Nominal Output (Tr 30 / Tm 50 °C) Pcond	kW	136.1
Minimum Output (Tr 30 / Tm 50 °C) Pcond min	kW	11.5
Efficiency at max. output (Tr 60 / Tm 80°C)	%	97.48
Efficiency at min. output (Tr 60 / Tm 80°C)	%	95.1
Efficiency at max. output (Tr 30 / Tm 50°C)	%	100.8
Efficiency at min. output (Tr 30 / Tm 50°C)	%	104.3
Efficiency at 30% output (Tr 30°C)	%	108.3
Combustion efficiency with nominal load	%	97.5
Combustion efficiency with minimum load	%	98.35
Heat loss at casing with burner in operation (Qmin)	%	3.28
Heat loss at casing with burner in operation (Qn)	%	0.02
Flue gas temperature tf-ta (min)(*)	°C	33
Flue gas temperature tf-ta (max)(*)	°C	55
Maximum allowable temperature	°C	100
Maximum operating temperature	°C	85
Flue gas mass flow rate (min)	kg/h	12.58
Flue gas mass flow rate (max)	kg/h	153.03
Excess λ air	%	25.53
Flue losses with burner in operation (min)	%	1.65
Flue losses with burner in operation (max)	%	2.90
Minimum heating circuit pressure	bar	0.5
Maximum heating circuit pressure	bar	6
Water content	l	10
Gas Consumption Natural (20 mbar) gas G 20 a Qn	m^3/h	14.27
Gas Consumption Natural gas (20 mbar) G 20 a Qmin	m^3/h	1.16
Gas Consumption G25 (supply pressure 25 mbar) Qn	m^3/h	16.60
Gas Consumption G25 (supply pressure 25 mbar) Qmin	m^3/h	1.35
Gas Consumption G31 (supply pressure 37/50 mbar) Qn	kg/h	10.48
Gas Consumption G31 (supply pressure 37/50 mbar) Qmin	kg/h	0.85
Max. available pressure at the chimney base	Pa	40
Condensate production max	kg/h	21.8
Emissions		
CO at Minimum Heat Input with 0% of O_2	mg/kWh	139
NO_x at Nominal Heat Input with 0% of O_2	mg/kWh	58
NO_x Class		6
Electrical Data		
Voltage/Frequency electric power supply	V/Hz	230/50
Fuse on main supply	A (R)	4
Insulation degree	IP	X5D

Room Temperature = 20°C. (*) Temperatures detected with the unit in operation (Tr 60 / Tm 80°C)

Seasonal Efficiency ηs according to Directive 2009/125/EC for Outputs < = 400 kW. See Erp Table

Standstill heat losses at Δt 30K – P_{stby} – See Erp Table

Standstill electrical consumption – P_{sb} – See Erp Table

DATA ACCORDING TO ErP DIRECTIVE

ELECTRICAL, HYDRAULIC, INSTALLATION DIAGRAMS AND CONTROLLERS can be unloaded from the web site www.unical.eu at the page of the product

			ALKON 140 EXT
NOMINAL HEAT OUTPUT	P_n	kW	132
SEASONAL SPACE HEATING ENERGY EFFICIENCY	η_s	%	93
SEASONAL EFFICIENCY CLASS IN HEATING MODE			**A**
FOR CH ONLY AND COMBINATION BOILERS: USEFUL HEAT OUTPUT			
USEFUL HEAT OUTPUT in high temperature regime (Tr 60 °C / Tm 80 °C)	P_4	kW	71.2
USEFUL EFFICIENCY AT NOM. HEAT OUTPUT in high-temperature regime (Tr 60°C / Tm 80°C)	η_4	%	87.8
USEFUL HEAT OUTPUT AT 30% OF NOM. HEAT OUTPUT in low-temperature regime (Tr 30°C)	P_1	kW	23.7
USEFUL EFFICIENCY AT 30% OF NOM. HEAT OUTPUT in low-temperature regime (Tr 30 °C)	η_1	%	97.6
RANGE-RATED BOILER: YES / NO			SI
AUXILIARY ELECTRICITY CONSUMPTION			
AT FULL LOAD	el_{max}	kW	0.474
AT PART LOAD	el_{min}	kW	0.159
IN STAND-BY MODE	P_{SB}	kW	0.007
OTHER ITEMS			
STAND-BY HEAT LOSS	P_{stby}	kW	2.68
EMISSIONS OF NITROGEN OXIDES referred to NCV & (GCV)	NO_x	mg/kWh	58 (52)
CONSUMPTION OF ANNUAL ELECTRICITY	Q_{HE}	GJ	653

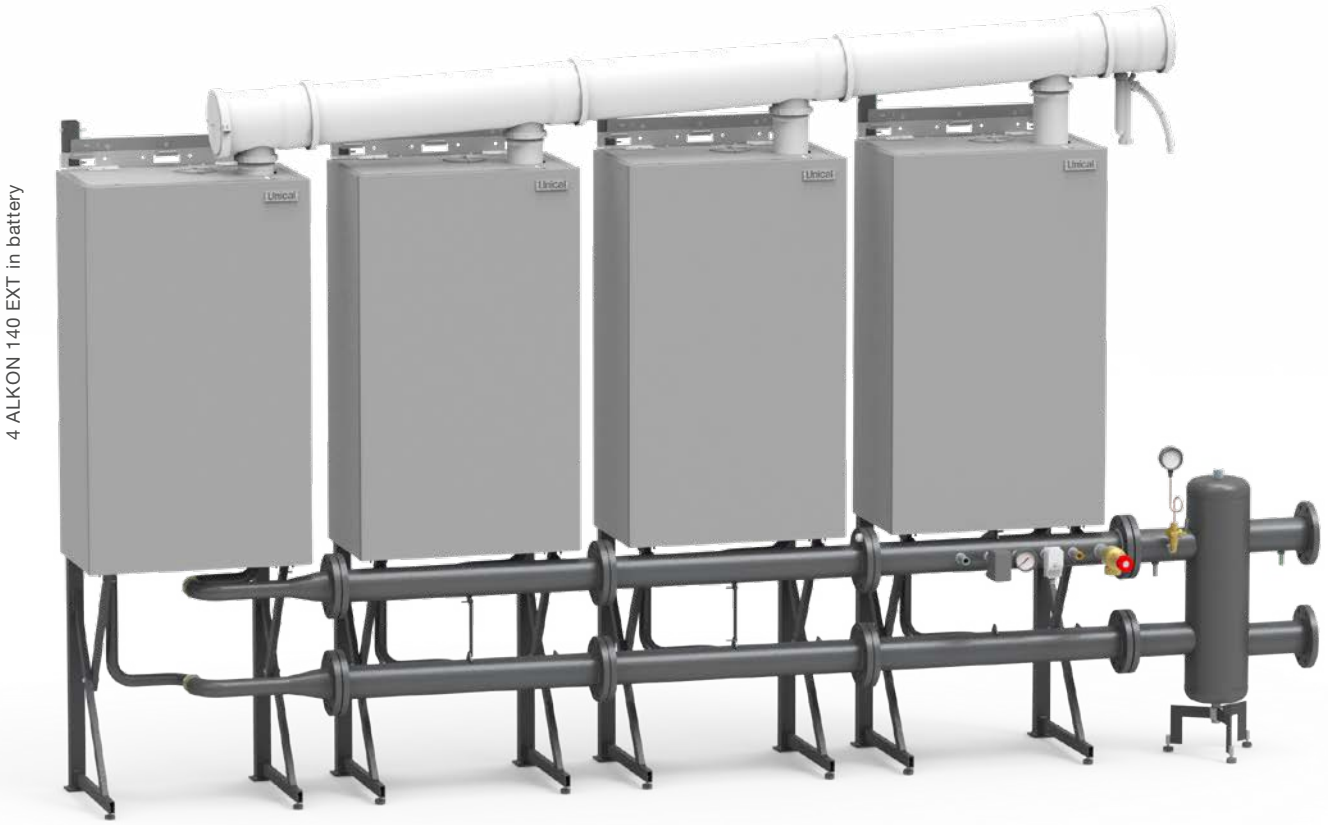

4 ALKON 140 EXT in battery

DIAGRAM OF FLOW RATE/PRESSURE AVAILABLE FOR INSTALLATION

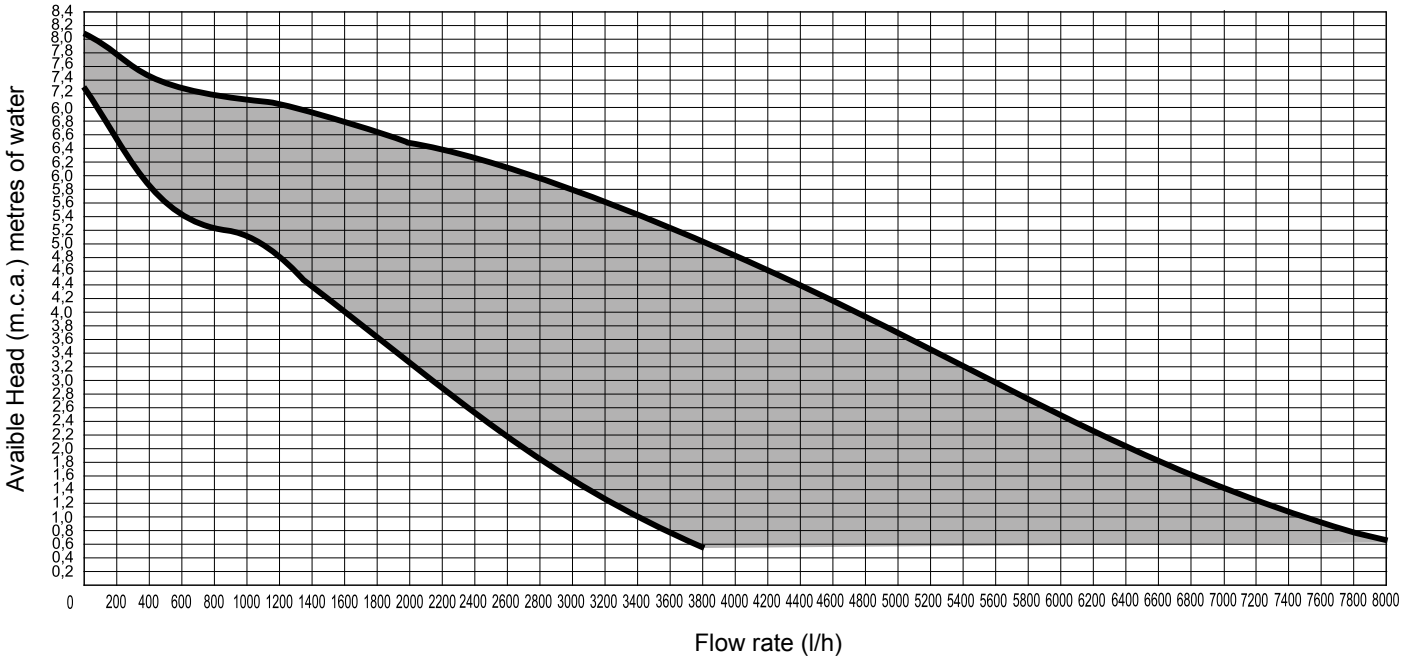

		ALKON 140 EXT
Power supply	kW	135
Max flow rate demanded l/h (Δt 15 K)	l/h	7545
Nominal flow rate request (Δt 20 K)	l/h	5659

Unical AG S.p.A. 46033 castel d'ario - mantova - italy - tel. +39 0376 57001 - fax +39 0376 660556 - export@unical-ag.com - www.unical.eu

Unical AG declines any liability for the inaccuracies that may appear due to errors in transcription or printing. It also reserves the right to introduce those modifications to its products that it considers necessary or useful, without compromising the essential characteristics of the said products.