Unical

KON 100-115

MODULATING CONDENSING BOILER WITH LOW NO_x PREMIX BURNER FOR OUTDOOR INSTALLATION (IPX5D)		
OUTPUT RANGE	da 99.5 a 920 kW in battery (115 kW x 8)	
EMISSIONS	Class 6 NO_x	
SUPPLY	Natural Gas or LPG	
MODELS	KON 100	KON 115
SEASONAL EFFICIENCY	A	

Wall hung with optional dedicated supporting kit - **available in battery (up to 8 for a total of 920 kW) can be combined both with MIXING HEADER and with PLATE HEAT EXCHANGERS**

MAIN COMPONENTS

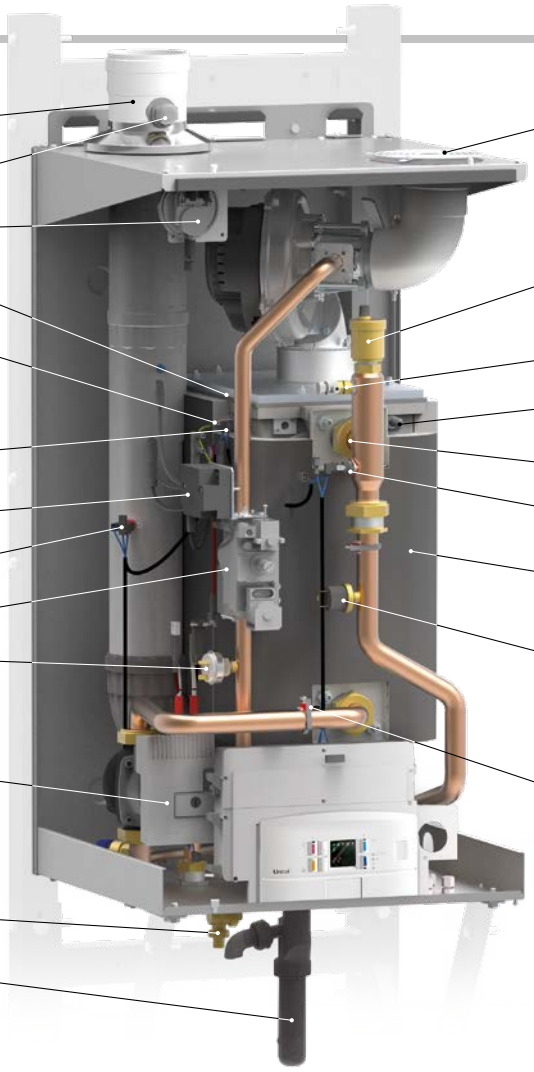

PRODUCT PLUS VALUES

- **CERTIFICATION IN OUTPUT RANGE**
  it is possible to have the customization of the input
- **WALL HUNG** with metallic load bearing structure (optional)
- **COMPACTNESS:** dimensions (WxHxD): 50x95x48 cm
- **PERFORMANCES** ErP class A
- **EFFICIENCY**
  up to 108,8% (ex Directive 92/42)
  η_s=94% according to ErP Directive
- **EMISSIONS:** Low NO_x Class 6
- **ISOLATION DEGREE IPX5D** can be installed outdoor in partially protected place (with antifreeze kit)
- **BODY STRUCTURE** with double furnace
- **BOILER BODY in Al/Si/Mg**
  low water content - 100% wet surfaces
- **EXCELLENT THERMAL EXCHANGE**
  Sophisticated cooling circuit with triple water circulation on 3 vertical columns
- **SIMPLE CONSTRUCTION**
  for a quick and economic servicing
- **BODY DURATION**
  thanks to the multi-year Unical experience in the metallurgy
- **RELIABILITY**
  thanks to the optimized circulation that avoids thermal overcharges; heat exchanger carefully designed, high efficiency modulating pimp, NTC control sensors
- **EFFICIENCY GUARANTEED FOR LONG TIME**
  thanks to the absence of scaling
- **ACCESSORIES (optional)**
  - PRIMARY RING, with MIXING HEADER / PLATE HEAT EXCHANGER
  - ADDITIONAL SAFETY DEVICES KIT
  - DIFFERENTIAL PRESSURE SWITCH with fittings
  - CONTROL PANEL BOARD HSCP
  - MULTI-FUNCTION MODULE SHC (for zones control)
  - NTC SENSOR FOR SHC MODUL
  - MULTI-FUNCTION MODULES FEEDER
  - PT1000 SENSOR for management of solar collectors
  - SIPHON HEATING KIT
  - KIT OF RESISTANCES FOR LOW TEMPERATURES
  - ACIDIC CONDENSATE INHIBITORS
- **EXPANDABLE IN CASCATE (up to 8 modules)**
- **GAS FEEDING PIPES available (optional)**
- **Available, on request, PLATE HEAT EXCHANGERS up to 4 modules in battery**
- **Kit Gateway P (optional) for Ufly P remote connection**

DIMENSIONS

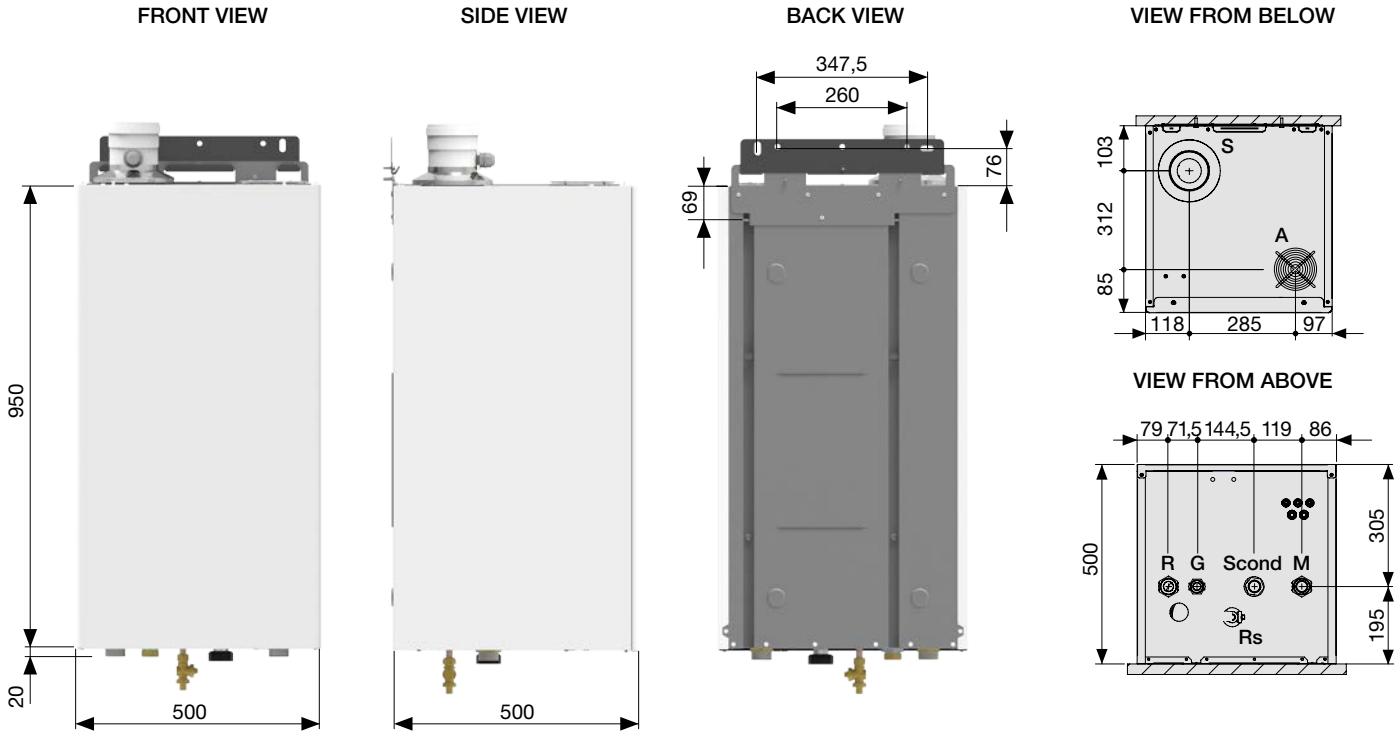

Key:

- **G** - Gas inlet G1”
- **M** - Heating system flow G1 ¼”
- **R** - Heating system return G1 ¼”
- **Rs** - Boiler drain
- **Scond** - Condensation drain Ø 32
- **S** - Flue gas exaust Ø 100
- **A** - Air intake Ø 80-100

KON	Net Weight kg	Gross Weight (with packaging) kg
100-115	81	96

DIMENSIONS WITH SUPPORTING FRAME (optional)

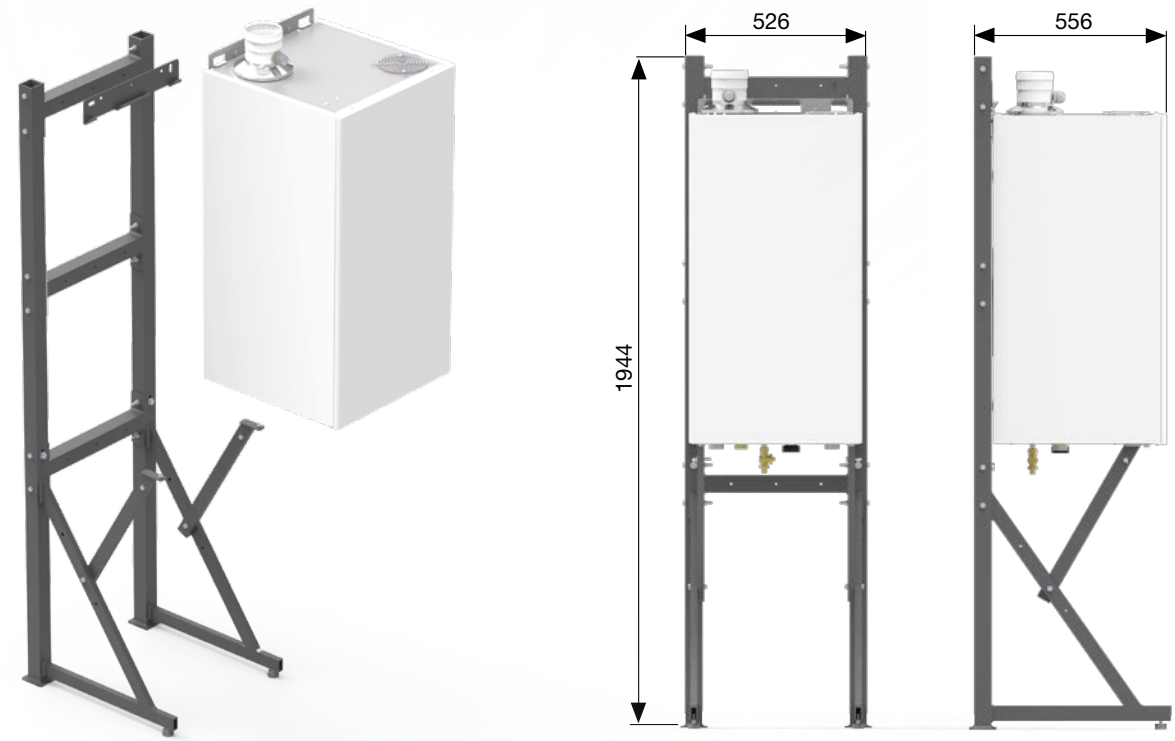

CONTROL PANEL (std. supplied)

The panel board equipping the boiler allows the management of an heating circuit with fixed set-point

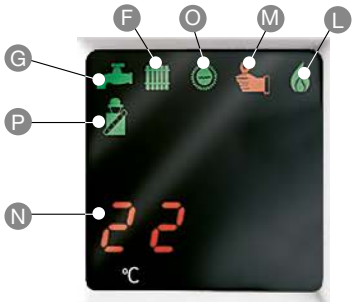

+/- Increase/decrease key
B Central Heating adjustment key
C Domestic hot water adjustment key
D Reset /chimney-sweeper key
E Information display
F Led/Simbol Heating function active
G Led/Simbol Domestic hot water function active
I Block symbol
L Burner in operation symbol
M Fault symbol
N Temperature or fault code indication
O Power On indicator led
P Activation sweeper mode
Q Power supply
S Function key: Stand-by / Heating / Domestic hot water + Heating / Antifreeze protection

SHC - MULTI-FUNCTION MODULE - HEATING CIRCUITS MANAGEMENT (optional)

The board is designed as a multi-function support for heating systems. It should be considered part of a modular system joined by an **eBUS** or **Modbus** communication system.

It is possible to control up to a maximum of 4 SHC printed circuit boards.

Its input and output resources make it suitable for a variety of applications:
1. Direct or mixed heating circuits
2. Domestic hot water with storage tank.
3. Domestic hot water with plate heat exchanger.
4. Domestic hot water with plate heat exchanger and mixing valve
5. Solar collector with tank.

The multi-function module interacts with the system like a user, whose demands must be met by a manager controller Ufly P, which is responsible for the running of the heat generator.

The multi-function module kit consists of:

- Panel
- NTC temperature sensor (3 pcs.)
- Technical assembly instructions

For further information consult the site www.unical.eu in the section Accessories of the product.

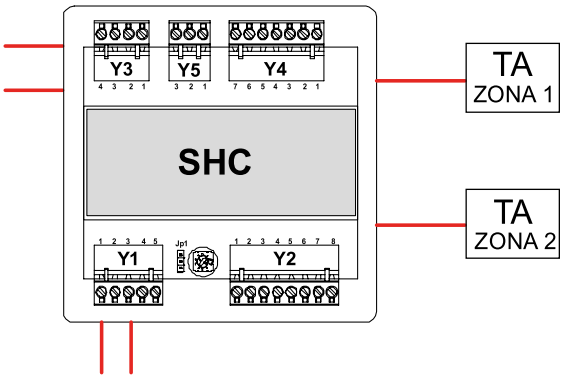

KON 115 IN BATTERY

COMPOSITION OF BATTERY + PRIMARY RING	Q.TY of KON 100-115 IN BATTERY						
	2	3	4	5	6	7	8
KIT OF HYDRAULIC MANIFOLD FOR 2 MODULES	1						
KIT OF HYDRAULIC MANIFOLD FOR 3 MODULES		1					
KIT OF HYDRAULIC MANIFOLD FOR 4 MODULES			1				
KIT OF HYDRAULIC MANIFOLD FOR 5 MODULES				1			
KIT OF HYDRAULIC MANIFOLD FOR 6 MODULES					1		
KIT OF HYDRAULIC MANIFOLD FOR 7 MODULES						1	
KIT OF HYDRAULIC MANIFOLD FOR 8 MODULES							1
KIT OF ADDITIONAL SAFETY DEVICES	1	1	1	1	1	1	1
MIXING HEADER FOR 2 MODULES	1						
MIXING HEADER FOR 3 TO 8 MODULES		1	1	1	1	1	1
DIFFERENTIAL PRESSURE SWITCH	2	3	4	5	6	7	8
BOILER SUPPORT	2	3	4	5	6	7	8
KIT CONTROL MANAGER Ufly P **made of:** cascade manager card BCM 2.0, viewer / programmer Ufly P, power pack 24V, outdoor temperature sensor, D.H.W. temperature sensor	1	1	1	1	1	1	1
KIT OF GAS MANIFOLD for connection of a single boiler	1	1	1	1	1	1	1
KIT OF GAS MANIFOLD for connection of a cascade	1	2	3	4	5	6	7
U SHAPED GAS MANIFOLD				1	1	1	1

Smoke evacuation

BASE KIT	1	1	1	1	1	1	1
SIPHON		1	2	2	3	6	5
OUTLET SIPHON	1	1	1	2	2	2	2
SINGLE SMOKE MANIFOLD				1	1	1	1
SMOKE PIPE EXTENSION Ø200 mm				3	2	1	

It is possible to reverse the hydraulic connections. It is not possible to reverse the gas manifold kits.

NOTE: 2 smoke exhaust ducts are foreseen which flow together with 2 separate couplings into a single flue; if you want to connect the 2 smoke ducts together with a special union manifold (not provided), you must have them calculated by a thermal engineer. For information, consult the "battery assembly instructions" document on the website www.unical.eu.

Available in combination with PLATE EXCHANGERS

DIMENSIONS OF A BATTERY OF TWO KON 100-115

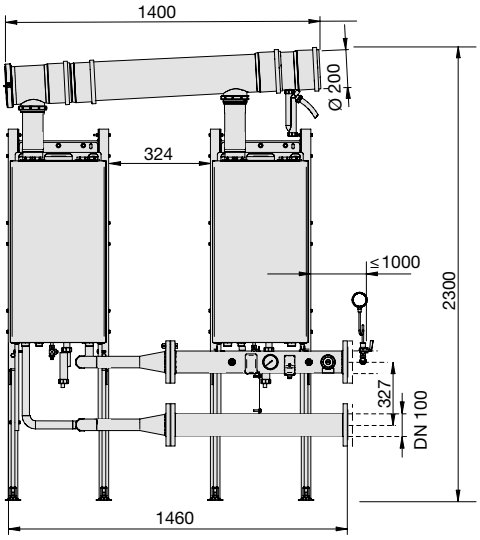

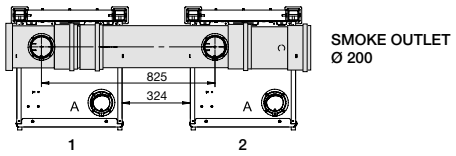

Operational data		KON 100	KON 115
Minimum Input on N.C.V. Qmin	kW	20	20
Nominal Input on N.C.V. Qn	kW	199	230
Nominal Output (60/80°C) Pn	kW	197.6	223
Nominal Output (30/50°C) Pcond	kW	210	240.6

Warning: The flue ducts in plastic material (PPS) are suitable only for Indoor installations.

DIMENSIONS OF A BATTERY OF THREE KON 100-115

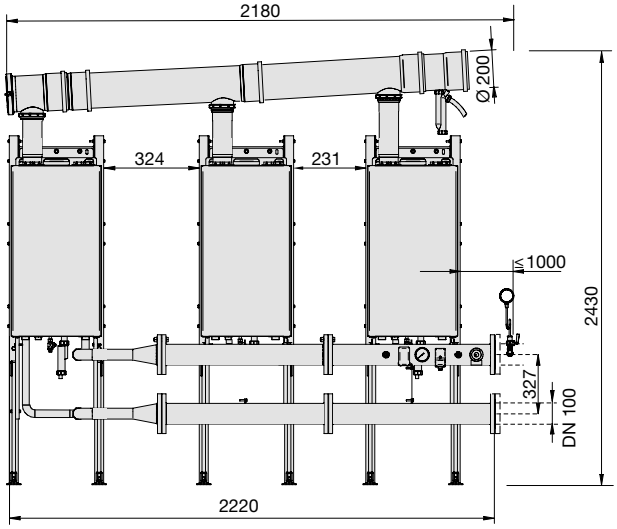

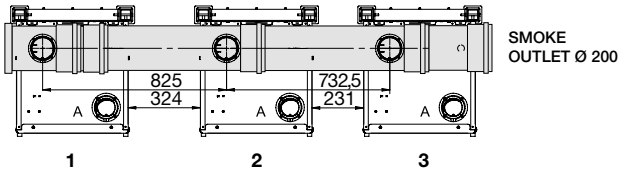

Operational data		KON 100	KON 115
Minimum Input on N.C.V. Qmin	kW	20	20
Nominal Input on N.C.V. Qn	kW	298.5	345
Nominal Output (60/80°C) Pn	kW	296.4	334.5
Nominal Output (30/50°C) Pcond	kW	315	360.9

Warning: The flue ducts in plastic material (PPS) are suitable only for Indoor installations.

DIMENSIONS OF A BATTERY OF FOUR KON 100-115

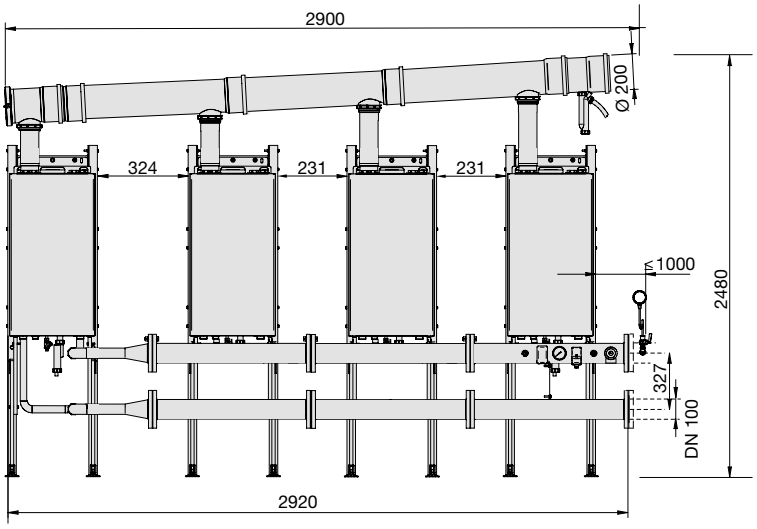

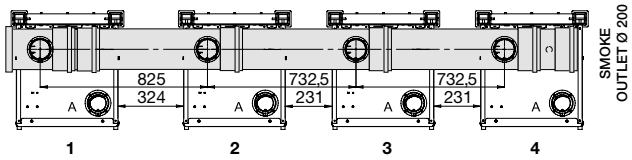

Operational data		KON 100	KON 115
Minimum Input on N.C.V. Qmin	kW	20	20
Nominal Input on N.C.V. Qn	kW	398	460
Nominal Output (60/80°C) Pn	kW	395.2	446
Nominal Output (30/50°C) Pcond	kW	420	481.2

Warning: The flue ducts in plastic material (PPS) are suitable only for Indoor installations.

DIMENSIONS OF A BATTERY OF FIVE KON 100-115 (4+1 ON THE OPPOSITE SIDE)

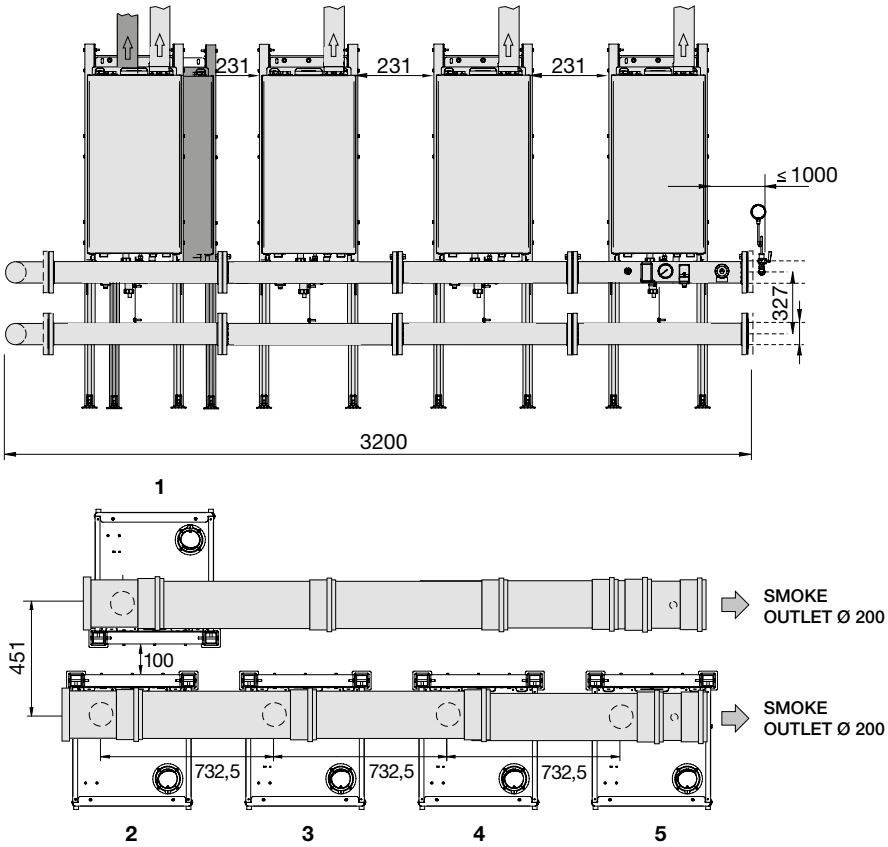

Operational data		KON 100	KON 115
Minimum Input on N.C.V. Qmin	kW	20	20
Nominal Input on N.C.V. Qn	kW	497.5	575
Nominal Output (60/80°C) Pn	kW	494.0	557.5
Nominal Output (30/50°C) Pcond	kW	525.0	601.5

Warning: The flue ducts in plastic material (PPS) are suitable only for Indoor installations.

DIMENSIONS OF A BATTERY OF SIX KON 100-115 (4+2 ON THE OPPOSITE SIDE)

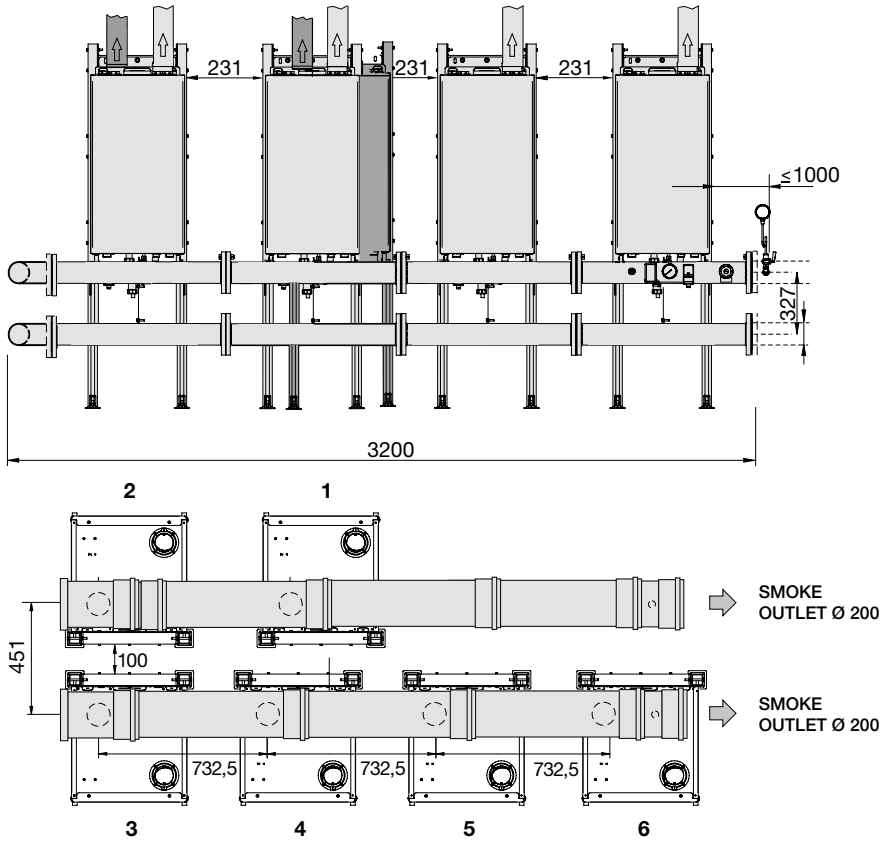

Operational data		KON 100	KON 115
Minimum Input on N.C.V. Qmin	kW	20	20
Nominal Input on N.C.V. Qn	kW	597	690
Nominal Output (60/80°C) Pn	kW	592.8	669
Nominal Output (30/50°C) Pcond	kW	630.0	721.8

Warning: The flue ducts in plastic material (PPS) are suitable only for Indoor installations.

DIMENSIONS OF A BATTERY OF SEVEN KON 100-115 (4+3 ON THE OPPOSITE SIDE)

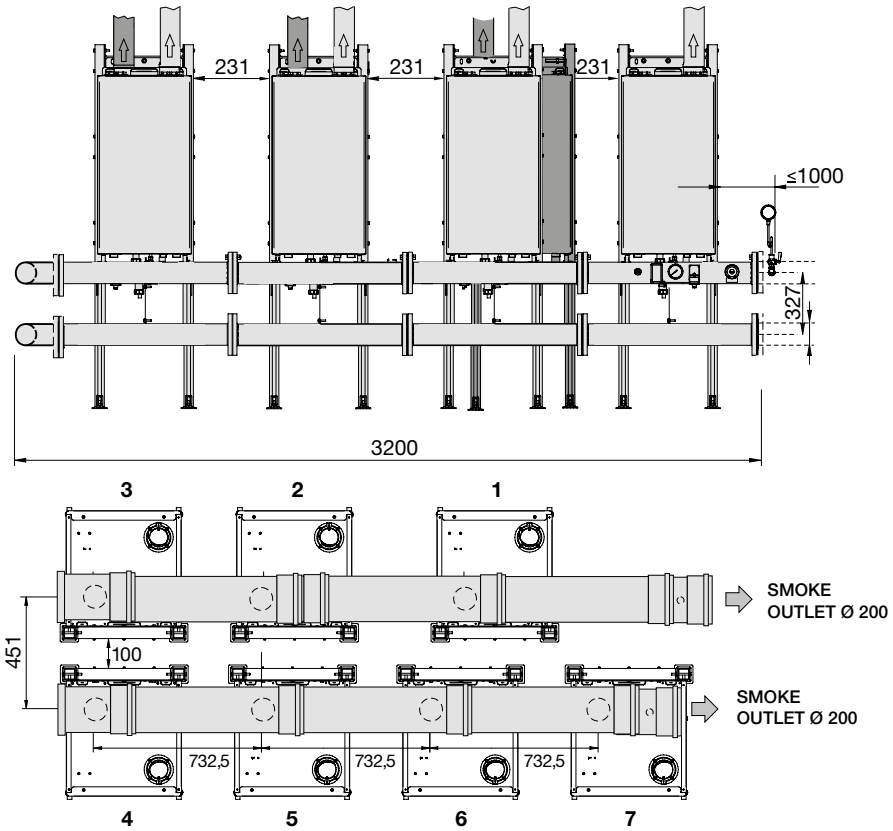

Operational data		KON 100	KON 115
Minimum Input on N.C.V. Qmin	kW	20	20
Nominal Input on N.C.V. Qn	kW	696.5	805
Nominal Output (60/80°C) Pn	kW	691.6	780.5
Nominal Output (30/50°C) Pcond	kW	735.0	842.1

Warning: The flue ducts in plastic material (PPS) are suitable only for Indoor installations.

DIMENSIONS OF A BATTERY OF EIGHT KON 100-115 (4+4 ON THE OPPOSITE SIDE)

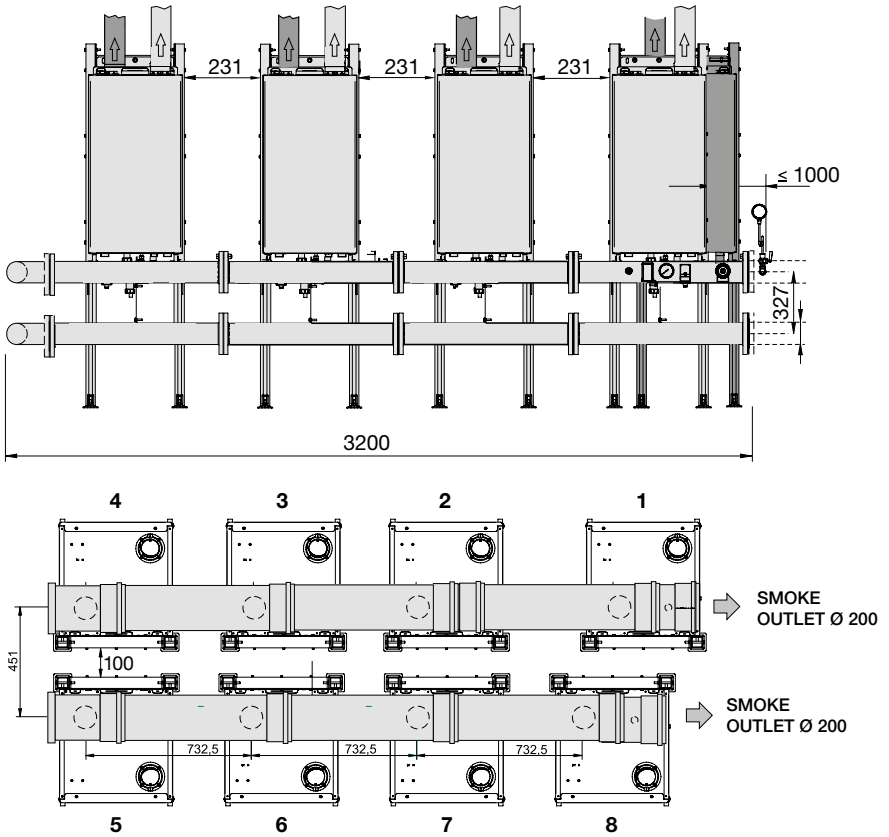

Operational data		KON 100	KON 115
Minimum Input on N.C.V. Qmin	kW	20	20
Nominal Input on N.C.V. Qn	kW	796	920
Nominal Output (60/80°C) Pn	kW	790.4	892
Nominal Output (30/50°C) Pcond	kW	840	962.4

Warning: The flue ducts in plastic material (PPS) are suitable only for Indoor installations.

MATCHING PLATE EXCHANGERS

DIMENSIONS SERIES E 50W

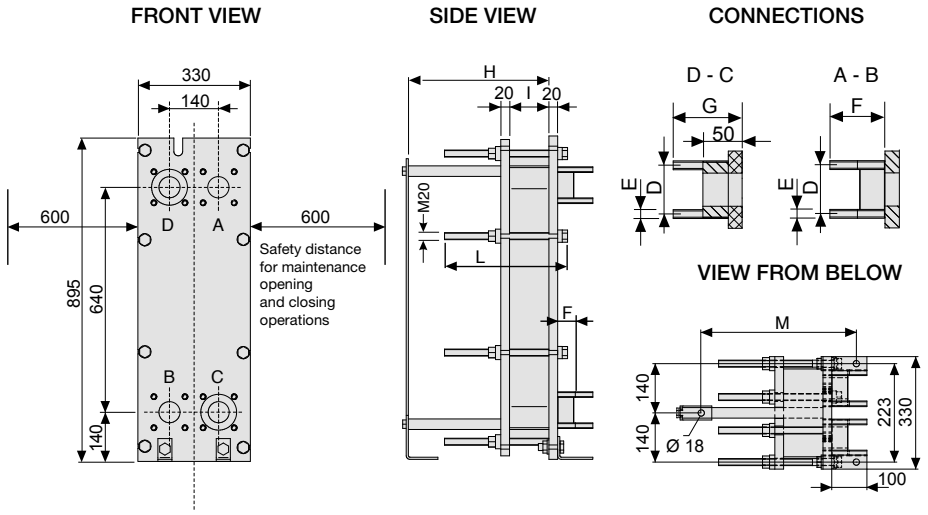

Plates	H	I	L	M
11	400	39	350	441
21	400	74	350	441
27	400	95	350	441
45	400	158	350	441

Connection	D	E	F	G
DN50 - 2”	125	M16	54	99

DIMENSIONS SERIES E 100W

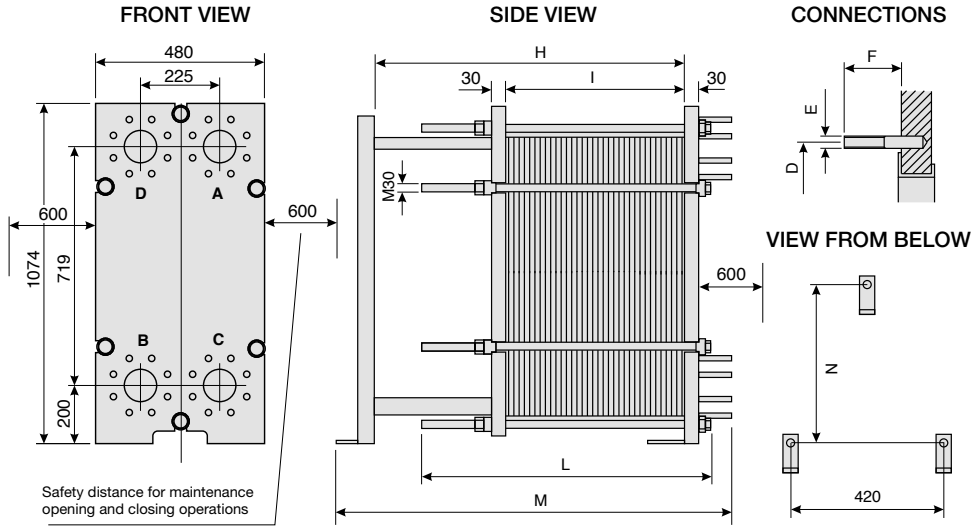

Plates	H	I	L	M	N
55	900	245	750	1110	905
63	900	281	750	1110	905
77	900	343	750	1110	905
87	900	388	750	1110	905

Connection	D	E	F
DN100 - 4”	180	M16	60

Number of boilers	Model	Number of plates	Pn kW	Δp (m H_2O) (*) primary / secondary	T. op. °C	Pmax bar	Volume H_2O primary / secondary	Connections primary / secondary	Weight kg
1	**E50W-21Y**	21	115	1,0 / 2,3	-10 / +110	10	4 / 4	DN50 / DN50	144
2	**E50W-45X**	45	230	2,0 / 4,4	-10 / +110	10	9 / 9	DN50 / DN50	165
3	**E50W-45X**	45	345	2,0 / 4,4	-10 / +110	10	9 / 9	DN50 / DN50	165
4	**E100W-55H**	55	460	0,8 / 1,8	-10 / +110	10	27 / 27	DN100 / DN100	367
5	**E100W-55H**	55	575	1,2 / 2,8	-10 / +110	10	27 / 27	DN100 / DN100	367
6	**E100W-77H**	77	690	0,9 / 2,2	-10 / +110	10	38 / 38	DN100 / DN100	400
7	**E100W-77H**	77	805	1,3 / 3,0	-10 / +110	10	38 / 38	DN100 / DN100	400
8	**E100W-87H**	87	920	0,9 / 2,0	-10 / +110	10	43 / 43	DN100 / DN100	415

(*) Δp alla Pn Primary circuit 80°C - 65°C Secondary circuit 60°C - 70°C

DIAGRAM OF FLOW RATE/PRESSURE AVAILABLE FOR INSTALLATION

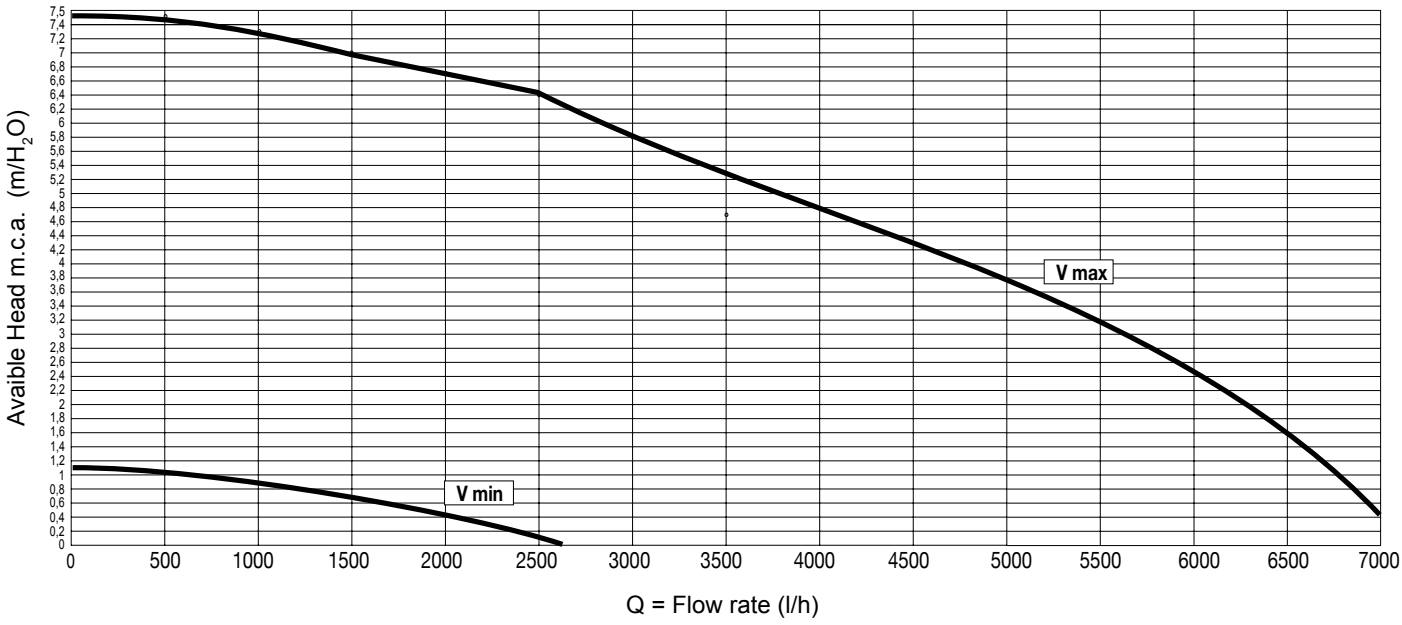

		KON 100	KON 115
Power supply	kW	99.5	115
Max flow rate demanded l/h (Δt 15 K)	l/h	5700	6600
Portata nominale richiesta (Δt 20 K)	l/h	4280	4950
Potenza in cond. (50/30)	kW	105	120.3
Power supply in condensation (50/30)	l/h	6020	6897
Max flow rate demanded l/h (Δt 15 K)	l/h	4520	5173

approximate data

The Δt between supply and return boiler must never be less than 15 K.

NOTE:
The use of a mixing header fitted between the boiler circuit and the system circuit is always advisable.
It becomes INDISPENSABLE if the system requires flow rates superior to the maximum permitted boiler flow rates, which is to say lower than 15 K.

TECHNICAL DATA

ELECTRICAL, HYDRAULIC, INSTALLATION DIAGRAMS AND CONTROLLERS can be unloaded from the web site www.unical.eu at the page of the product

		KON 100	KON 115
Appliance category		II_{2H3P}	II_{2H3P}
Modulation Ratio		1:5	1:5.8
Nominal Heat Input on P.C.I. Qn	kW	99.5	115
Minimum Heat Input on P.C.I. Qmin	kW	20	20
Nominal Output (Tr 60 / Tm 80 °C) Pn	kW	97.3	111.9
Minimum Output (Tr 60 / Tm 80 °C) Pn min	kW	19.2	19.2
Nominal Output (Tr 30 / Tm 50 °C) Pcond	kW	104.6	120.3
Minimum Output (Tr 30 / Tm 50 °C) Pcond min	kW	21.4	21.4
Efficiency at max. output (Tr 60 / Tm 80°C)	%	97.77	97.32
Efficiency at min. output (Tr 60 / Tm 80°C)	%	95.90	95.90
Efficiency at max. output (Tr 30 / Tm 50°C)	%	105.17	104.31
Efficiency at min. output (Tr 30 / Tm 50°C)	%	107.1	107.1
Efficiency at 30% output (Tr 30°C)	%	107.27	107.21
Combustion efficiency with nominal load	%	97.84	97.73
Combustion efficiency with minimum load	%	98.27	98.26
Heat loss at casing with burner in operation (Qmin)	%	2.38	2.36
Heat loss at casing with burner in operation (Qn)	%	0.07	0.41
Flue gas temperature tf-ta (min)(*)	°C	33.2	33.4
Flue gas temperature tf-ta (max)(*)	°C	44	46.1
Maximum allowable temperature	°C	100	100
Maximum operating temperature	°C	85	85
Flue gas mass flow rate (min)	kg/h	34.31	34.31
Flue gas mass flow rate (max)	kg/h	158.98	184.7
Excess λ air	%	23	23
Flue losses with burner in operation (min)	%	1.73	1.74
Flue losses with burner in operation (max)	%	2.16	2.27
Minimum heating circuit pressure	bar (kPa)	0.6 (60)	0.6 (60)
Maximum heating circuit pressure	bar (kPa)	6 (600)	6 (600)
Water content	l	9	9
Gas Consumption Natural (20 mbar) gas G 20 a Qn	m^3/h	10.52	12.16
Gas Consumption Natural gas (20 mbar) G 20 a Qmin	m^3/h	2.11	2.11
Gas Consumption G25 (supply pressure 25 mbar) Qn	m^3/h	12.24	14.14
Gas Consumption G25 (supply pressure 25 mbar) Qmin	m^3/h	2.46	2.46
Gas Consumption G31 (supply pressure 37/50 mbar) Qn	kg/h	7.72	8.93
Gas Consumption G31 (supply pressure 37/50 mbar) Qmin	kg/h	1.56	1.56
Max. available pressure at the chimney base	Pa	150	150
Condensate production max	kg/h	15.94	18.51
Emissions			
CO at Minimum Heat Input with 0% of O_2	mg/kWh	178	209
NO_x at Nominal Heat Input with 0% of O_2	mg/kWh	40	40
NO_x Class		6	6
Electrical Data			
Voltage/Frequency electric power supply	V/Hz	230/50	230/50
Fuse on main supply	A (R)	4AF 250V	4AF 250V
Insulation degree	IP	X5D	X5D

Room Temperature = 20°C.

(*) Temperatures detected with the unit in operation (Tr 60 / Tm 80°C)

Seasonal Efficiency ηs according to Directive 2009/125/EC for Outputs < = 400 kW. See Erp Table

Standstill heat losses at Δt 30K – P_{stby} – See Erp Table

Standstill electrical consumption – P_{sb} – See Erp Table

DATA ACCORDING TO ErP DIRECTIVE

ELECTRICAL, HYDRAULIC, INSTALLATION DIAGRAMS AND CONTROLLERS can be unloaded from the web site www.unical.eu at the page of the product

			KON 100	KON 115
NOMINAL HEAT OUTPUT	P_n	kW	99	112
SEASONAL SPACE HEATING ENERGY EFFICIENCY	η_s	%	94	92
SEASONAL EFFICIENCY CLASS IN HEATING MODE			**A**	**A**
FOR CH ONLY AND COMBINATION BOILERS: USEFUL HEAT OUTPUT				
USEFUL HEAT OUTPUT in high temperature regime (Tr 60 °C / Tm 80 °C)	P_4	kW	98.8	111.5
USEFUL EFFICIENCY AT NOM. HEAT OUTPUT in high-temperature regime (Tr 60°C / Tm 80°C)	η_4	%	89.0	87.4
USEFUL HEAT OUTPUT AT 30% OF NOM. HEAT OUTPUT in low-temperature regime (Tr 30°C)	P_1	kW	32.2	37
USEFUL EFFICIENCY AT 30% OF NOM. HEAT OUTPUT in low-temperature regime (Tr 30 °C)	η_1	%	98.5	96.7
RANGE-RATED BOILER: YES / NO			NO	NO
AUXILIARY ELECTRICITY CONSUMPTION				
AT FULL LOAD	el_{max}	kW	0.289	0.314
AT PART LOAD	el_{min}	kW	0.156	0.160
IN STAND-BY MODE	P_{SB}	kW	0.018	0.028
OTHER ITEMS				
STAND-BY HEAT LOSS	P_{stby}	kW	0.641	0.642
EMISSIONS OF NITROGEN OXIDES referred to GCV	NO_x	mg/kWh	39	42
CONSUMPTION OF ANNUAL ELECTRICITY	Q_{HE}	GJ	301	349

Unical AG S.p.A. 46033 castel d'ario - mantova - italy - tel. +39 0376 57001 - fax +39 0376 660556 - export@unical-ag.com - www.unical.eu

Unical AG declines any liability for the inaccuracies that may appear due to errors in transcription or printing. It also reserves the right to introduce those modifications to its products that it considers necessary or useful, without compromising the essential characteristics of the said products.